PREFALZ FAÇADE (horizontal)

CAD DETAILY

CONTENTS:

TIMBER SUB-STRUCTURE FRAMEWORK

2 vertical cross-section – bottom connection
3 horizontal cross-section – wall connection
4 horizontal cross-section – external corner
5 horizontal cross-section – internal corner
6 vertical cross-section – window ledge
7 horizontal cross-section – window reveals
8 vertical cross-section – window lintel
9 vertical cross-section – top connection
10 vertical cross-section – roof parapet

ALUMINIUM SUB-STRUCTURE FRAMEWORK

11 vertical cross-section – bottom connection
12 horizontal cross-section – wall connection
13 horizontal cross-section – external corner
14 horizontal cross-section – internal corner
15 vertical cross-section – window ledge
16 horizontal cross-section – window reveals
17 vertical cross-section – window lintel
18 vertical cross-section – top connection
19 vertical cross-section – roof parapet

bottom connection
vertical cross-section
PREFALZ FAÇADE (horizontal)
CAD DETAILS

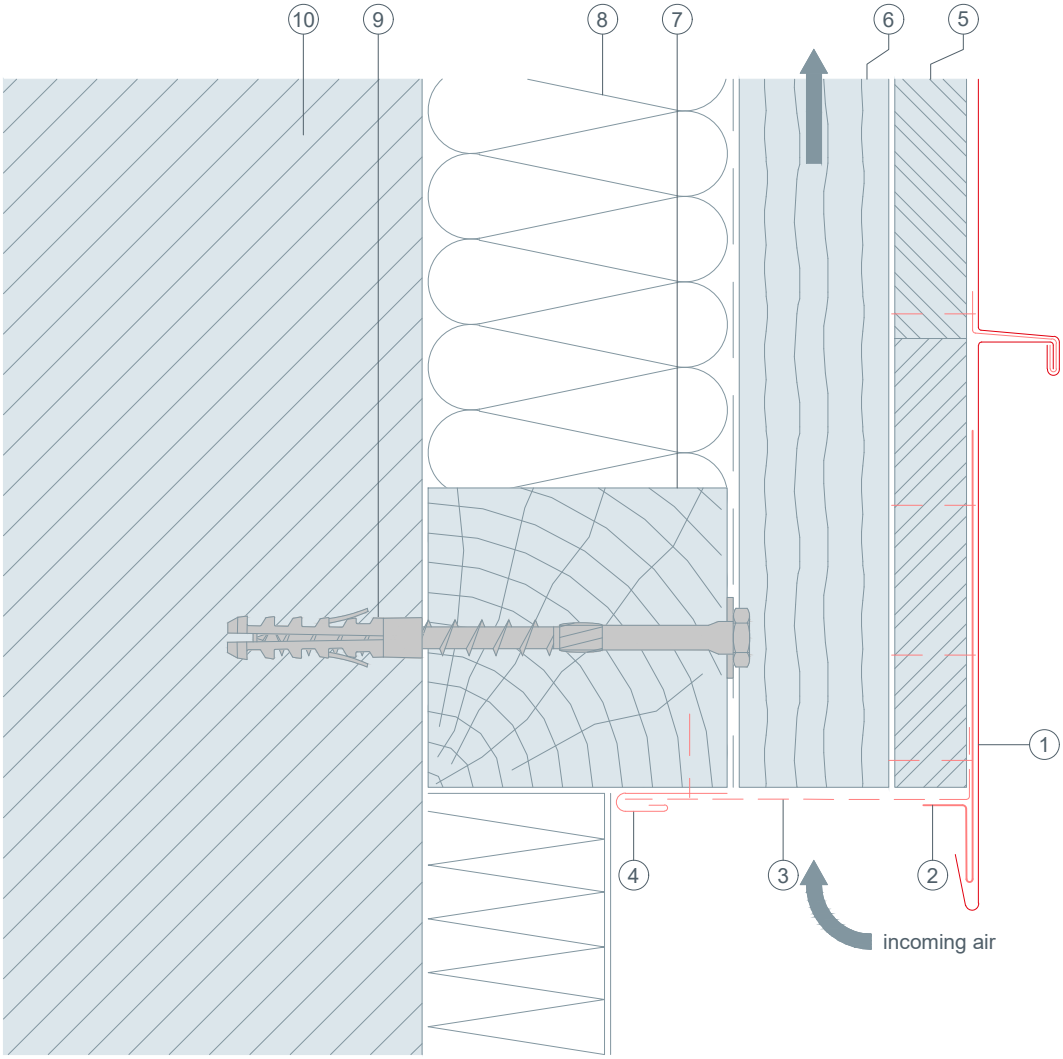

1. PREFALZ single-lock standing seam façade (horizontal)
2. edge cleat strip
3. perforated metal plate (canted)
4. insertion profile (PREFA)
5. solid sheating conforming to national guidelines
6. counter batten - ventilation gap
7. nogging piece
8. insulation
9. fastener driven into the supporting structure
10. structure substrate

wall connection
horizontal cross-section
PREFALZ FAÇADE (horizontal)
CAD DETAILS

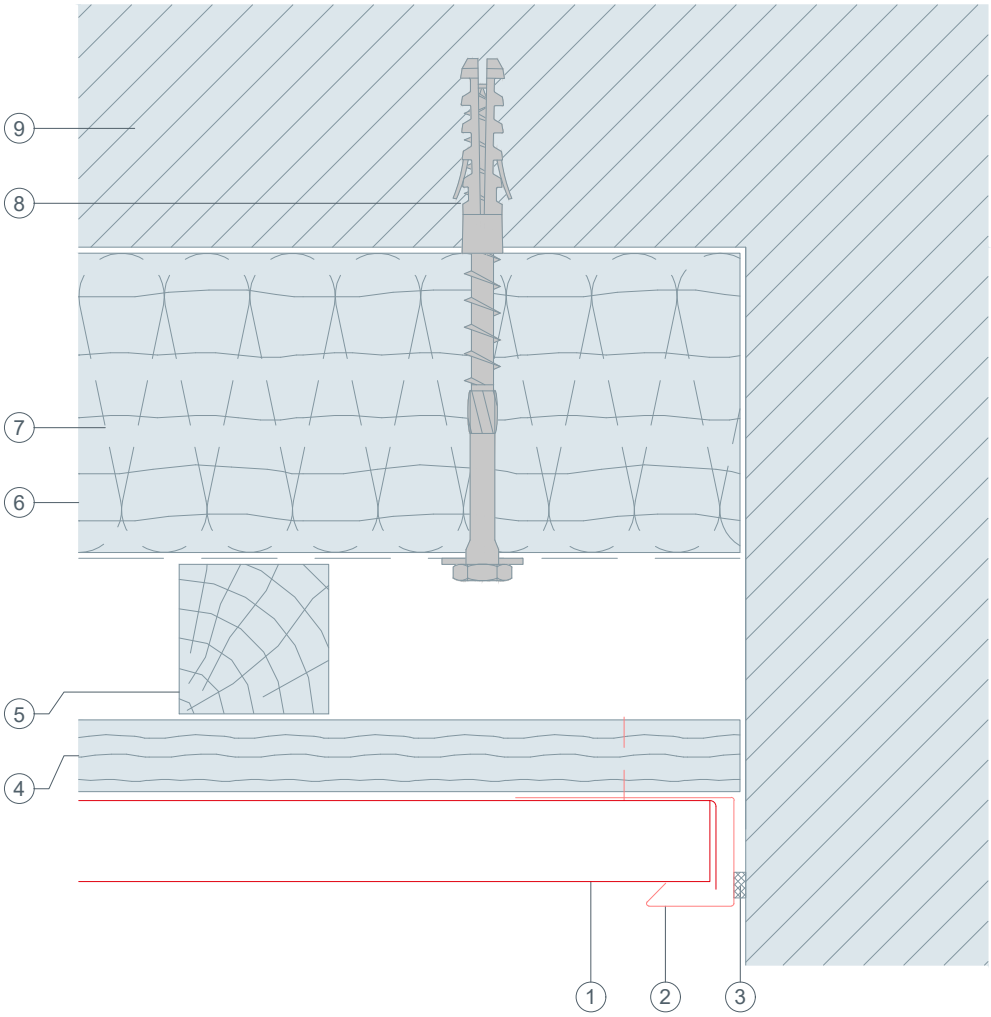

1. PREFALZ single-lock standing seam façade (horizontal)
2. channel profile (canted)
3. sealing tape
4. solid sheating conforming to national guidelines
5. counter batten - ventilation gap
6. nogging piece
7. insulation
8. fastener driven into the supporting structure
9. structure substrate

external corner
horizontal cross-section
PREFALZ FAÇADE (horizontal)
CAD DETAILS

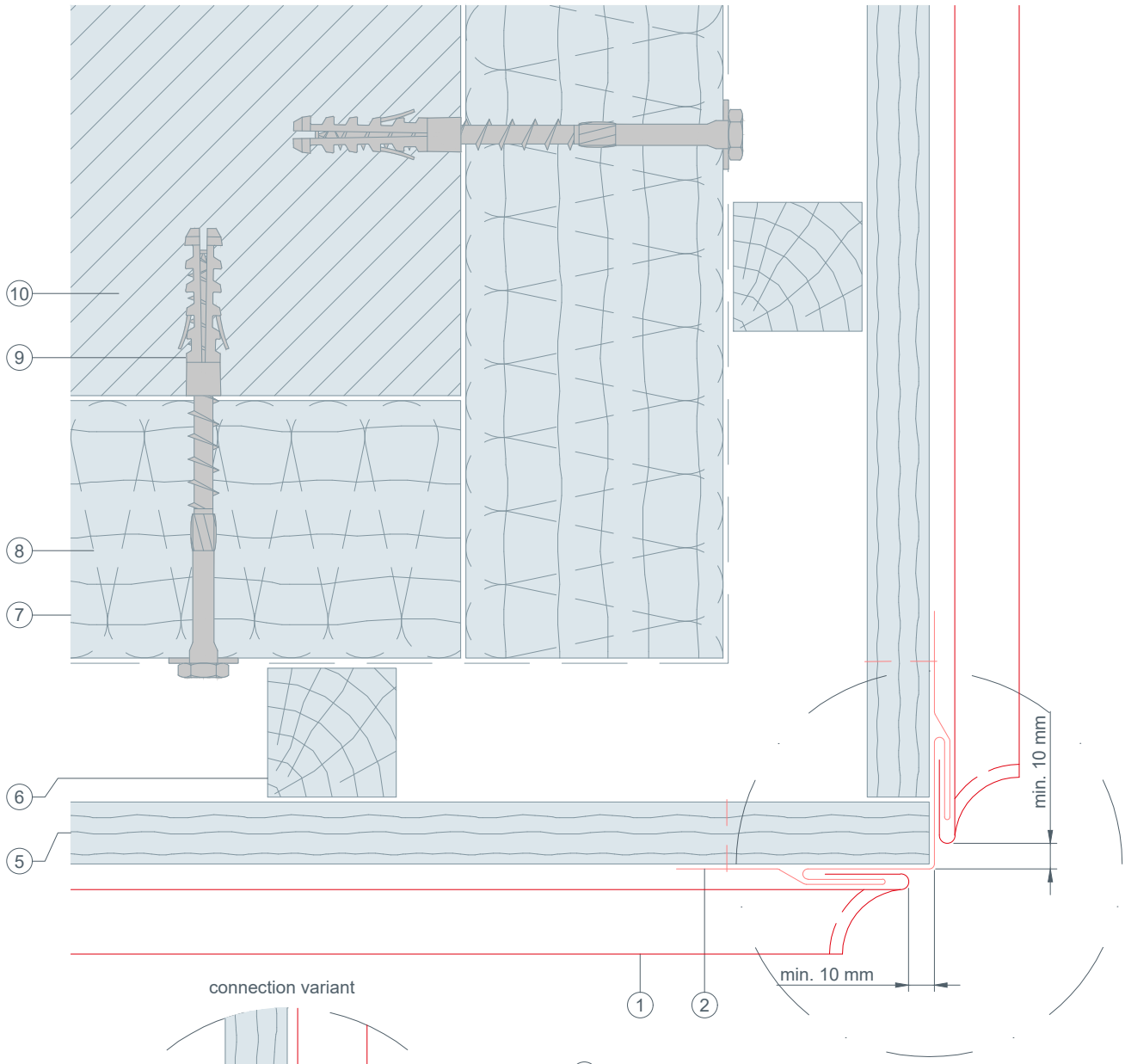

connection variant

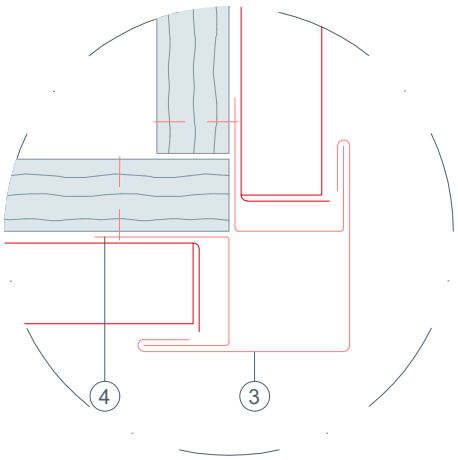

1. PREFALZ single-lock standing seam façade (horizontal)
2. external corner (canted)
3. external corner flashing
4. Taschenprofil für Eckwinkel außen
5. channel profile for external corner
6. counter batten - ventilation gap
7. nogging piece
8. insulation
9. fastener driven into the supporting structure
10. structure substrate

internal corner
horizontal cross-section
PREFALZ FAÇADE (horizontal)
CAD DETAILS

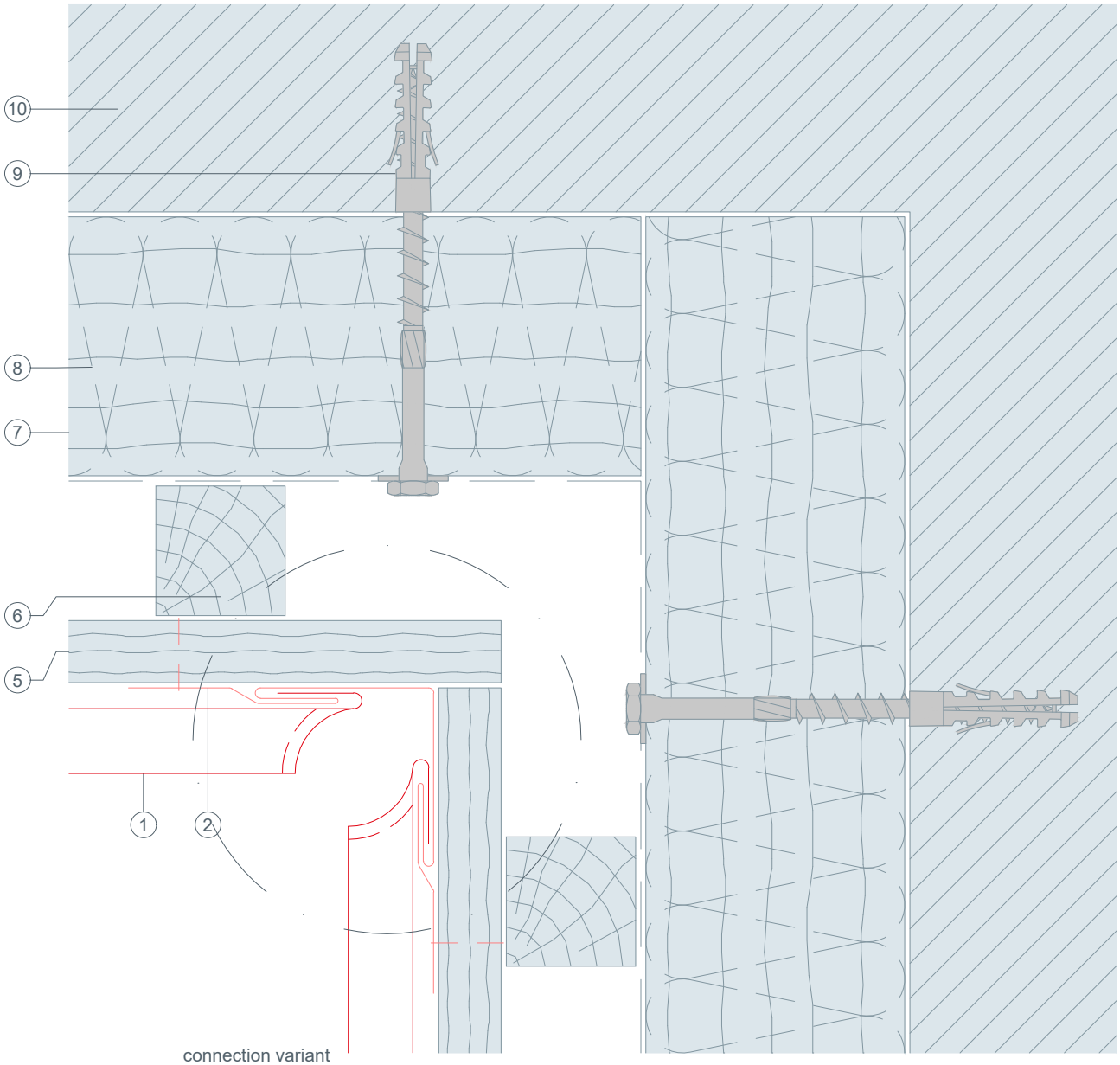

connection variant

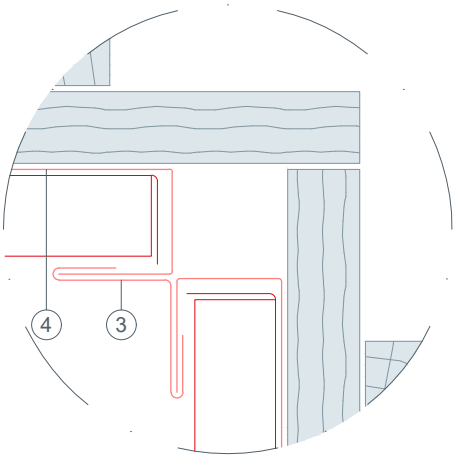

1. PREFALZ single-lock standing seam façade (horizontal)
2. internal corner (canted)
3. internal corner flashing
4. channel profile for internal corner
5. solid sheating conforming to national guidelines
6. counter batten - ventilation gap
7. nogging piece
8. insulation
9. fastener driven into the supporting structure
10. structure substrate

window ledge
vertical cross-section
PREFALZ FAÇADE (horizontal)
CAD DETAILS

1. PREFALZ single-lock standing seam façade (horizontal)
2. clip
3. window ledge flashing strip
4. perforated metal plate (canted)
5. window ledge
6. solid sheating conforming to national guidelines
7. counter batten - ventilation gap
8. nogging piece
9. insulation
10. fastener driven into the supporting structure
11. structure substrate

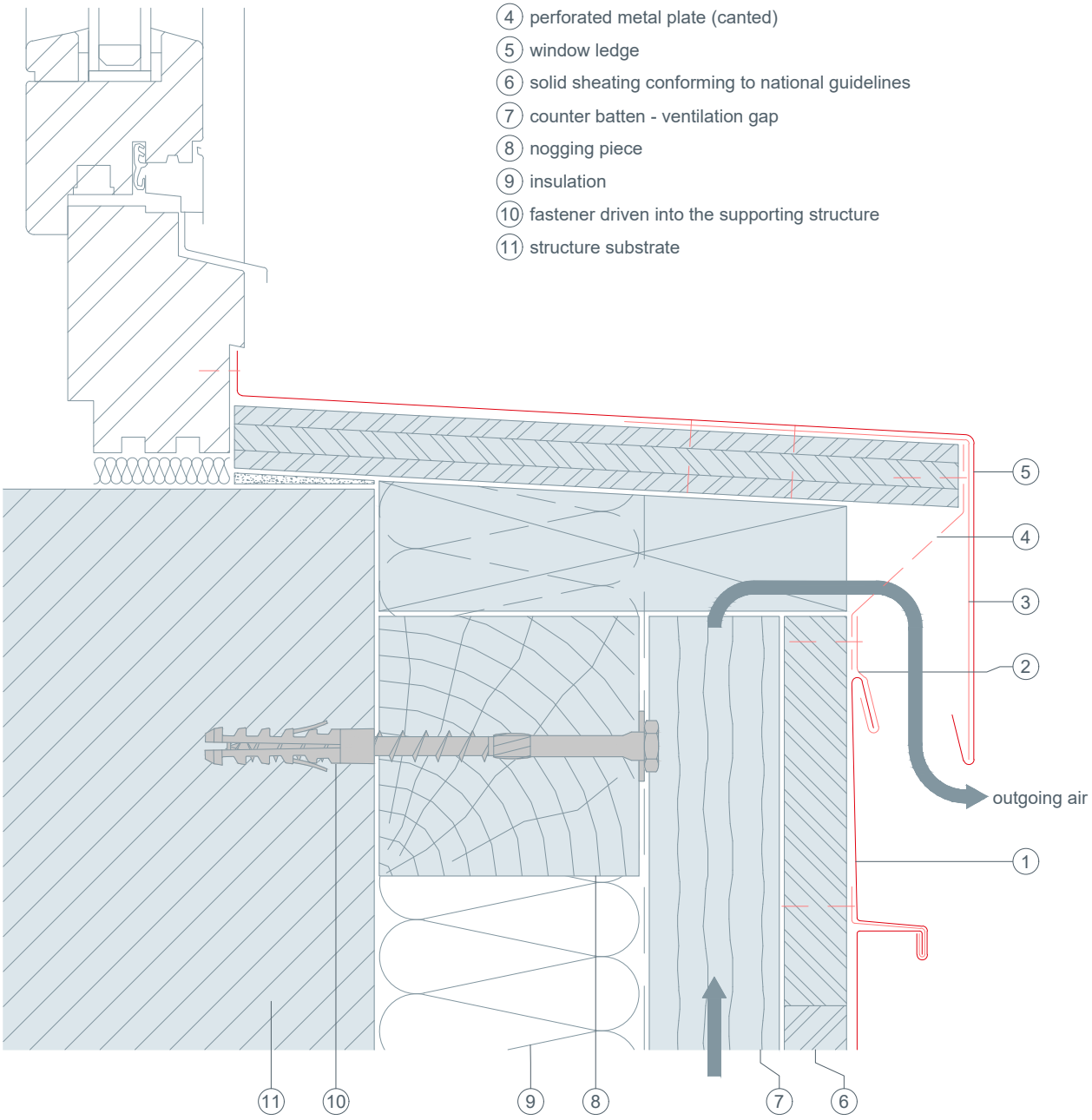

window reveals
horizontal cross-section
PREFALZ FAÇADE (horizontal)
CAD DETAILS

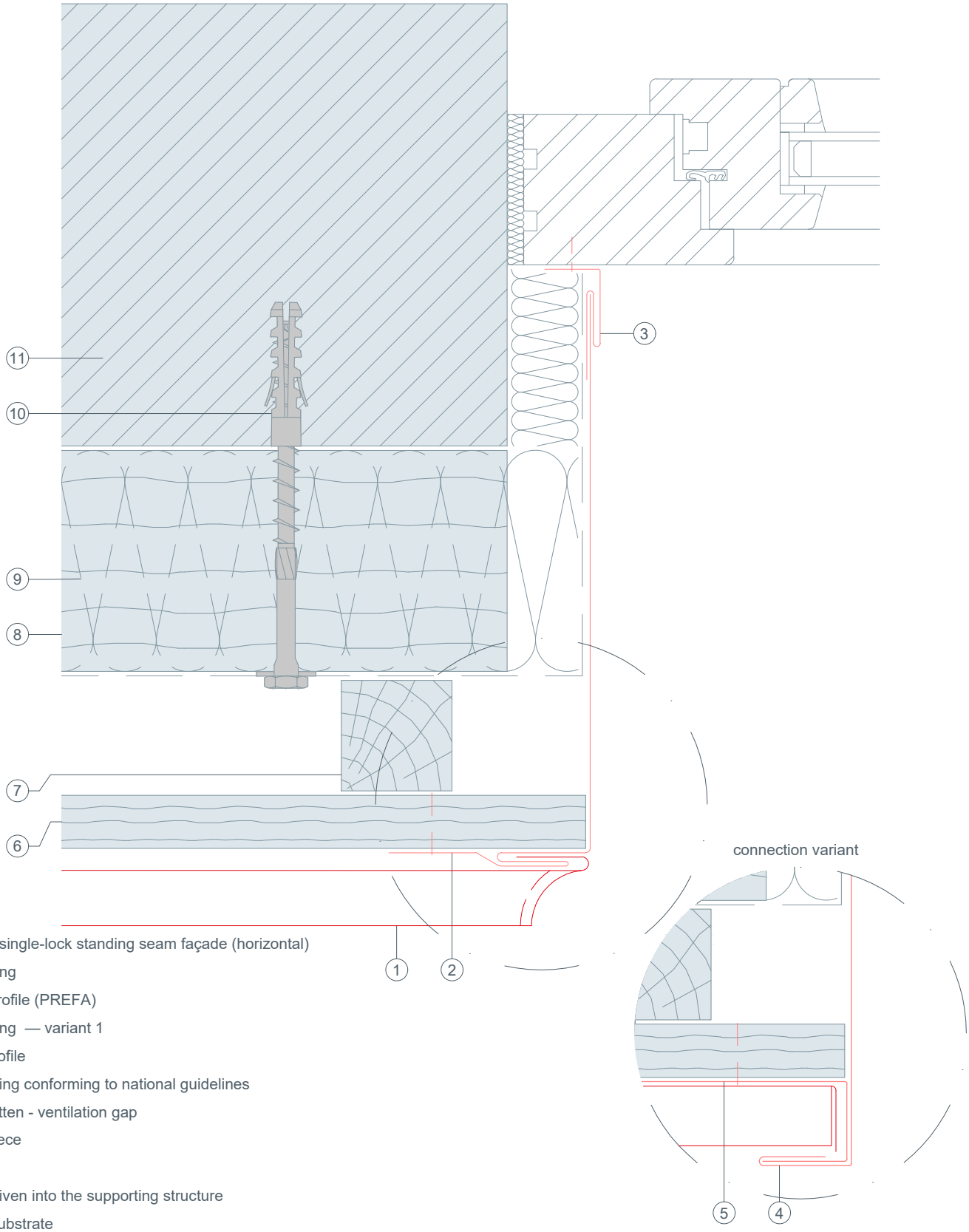

1. PREFALZ single-lock standing seam façade (horizontal)
2. jamb flashing
3. insertion profile (PREFA)
4. jamb flashing — variant 1
5. channel profile
6. solid sheating conforming to national guidelines
7. counter batten - ventilation gap
8. nogging piece
9. insulation
10. fastener driven into the supporting structure
11. structure substrate

window lintel
vertical cross-section
PREFALZ FAÇADE (horizontal)
CAD DETAILS

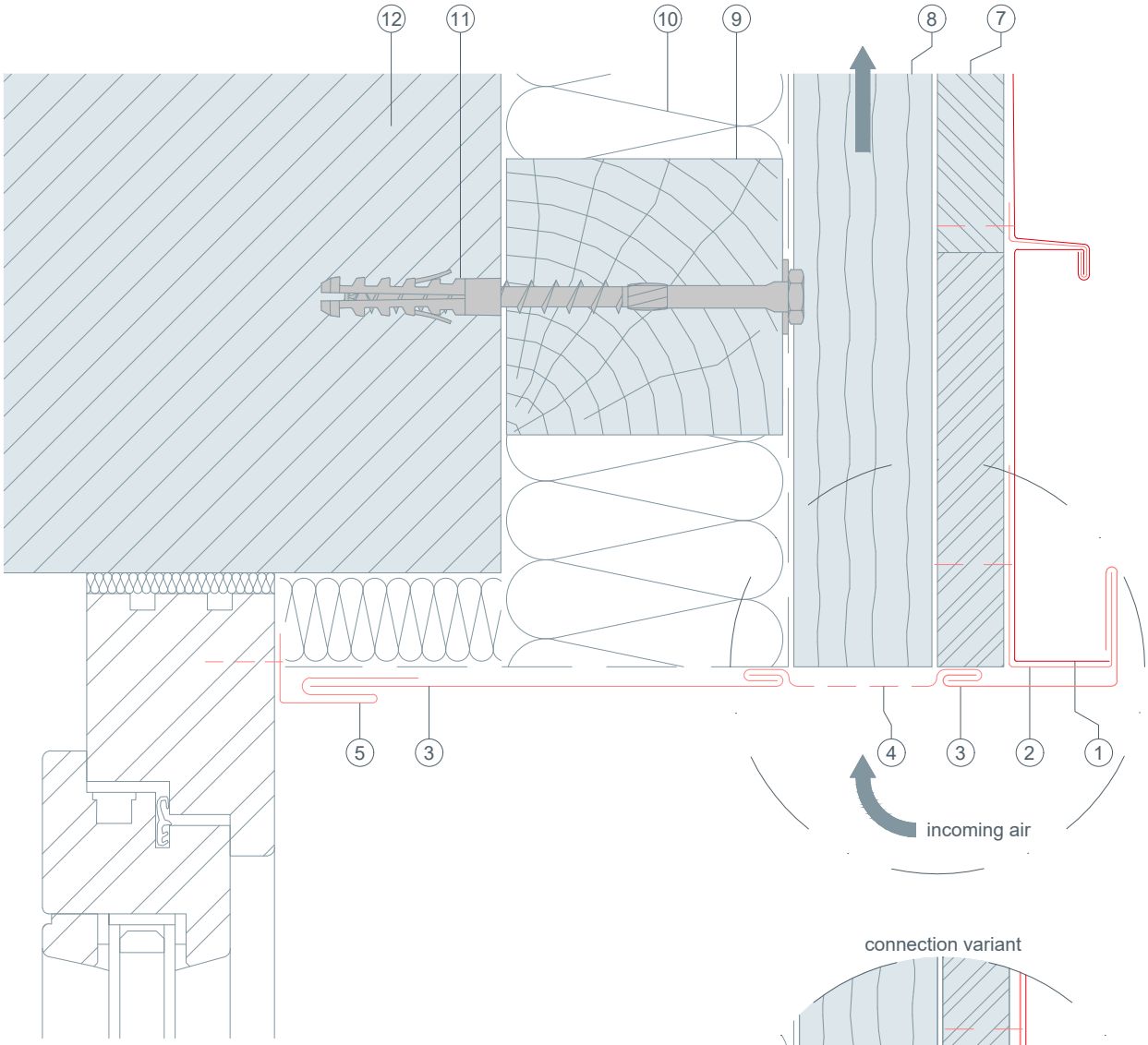

connection variant

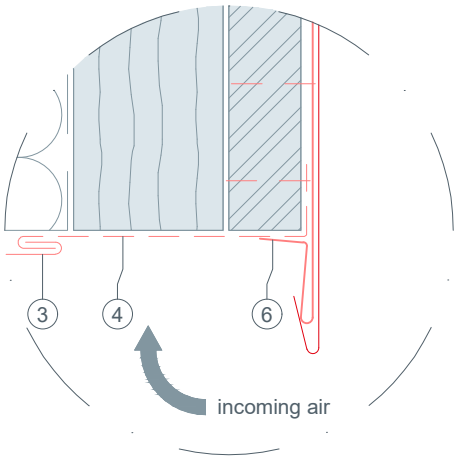

1. PREFALZ single-lock standing seam façade (horizontal)
2. channel profile
3. cover flashing
4. perforated metal plate (canted)
5. insertion profile (PREFA)
6. edge cleat strip
7. solid sheating conforming to national guidelines
8. counter batten - ventilation gap
9. nogging piece
10. insulation
11. fastener driven into the supporting structure
12. structure substrate

top connection
vertical cross-section
PREFALZ FAÇADE (horizontal)
CAD DETAILS

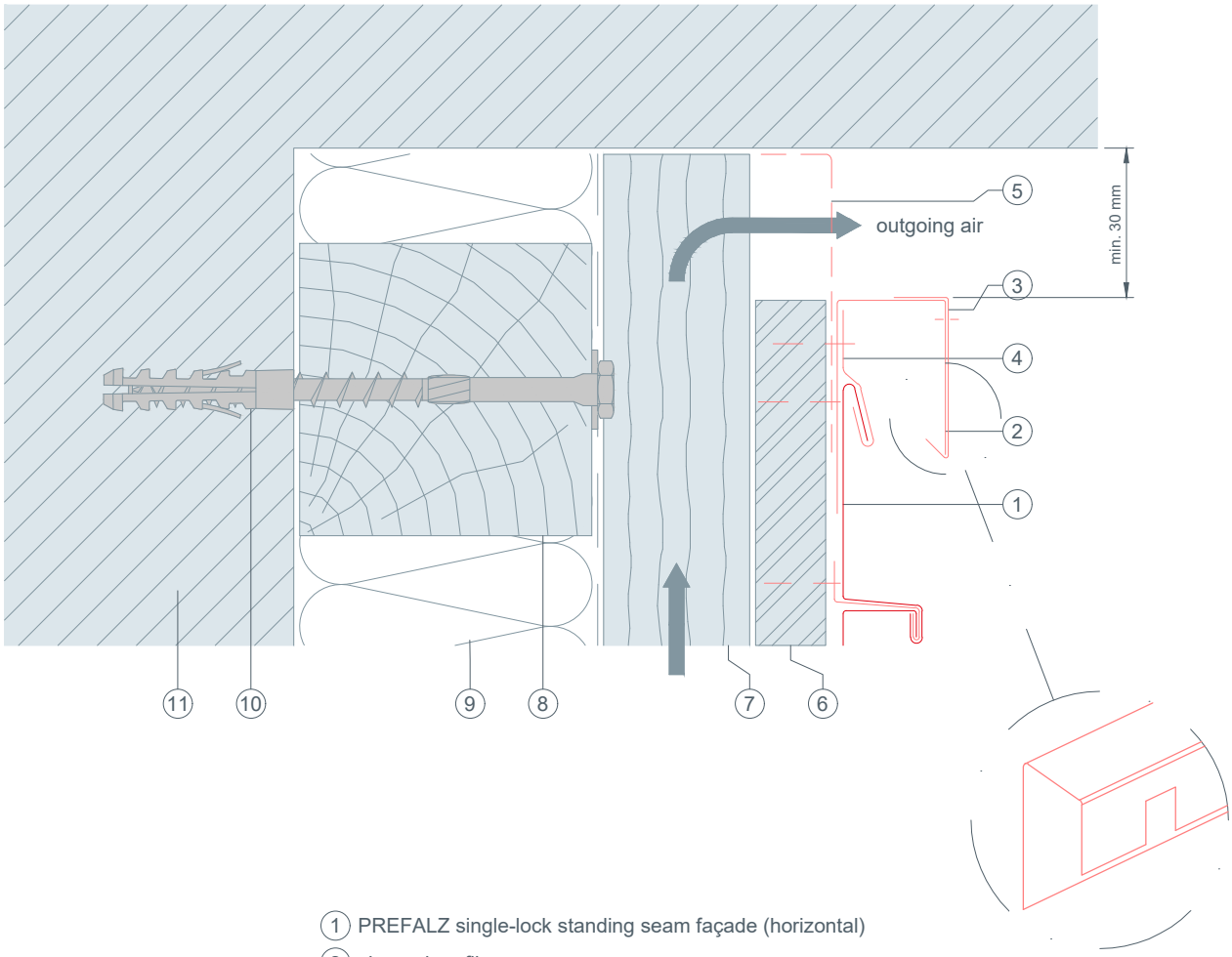

1. PREFALZ single-lock standing seam façade (horizontal)
2. channel profile
3. closing profile
4. clip
5. perforated metal plate (canted)
6. solid sheating conforming to national guidelines
7. counter batten - ventilation gap
8. nogging piece
9. insulation
10. fastener driven into the supporting structure
11. structure substrate

roof parapet
vertical cross-section
PREFALZ FAÇADE (horizontal)

CAD DETAILS

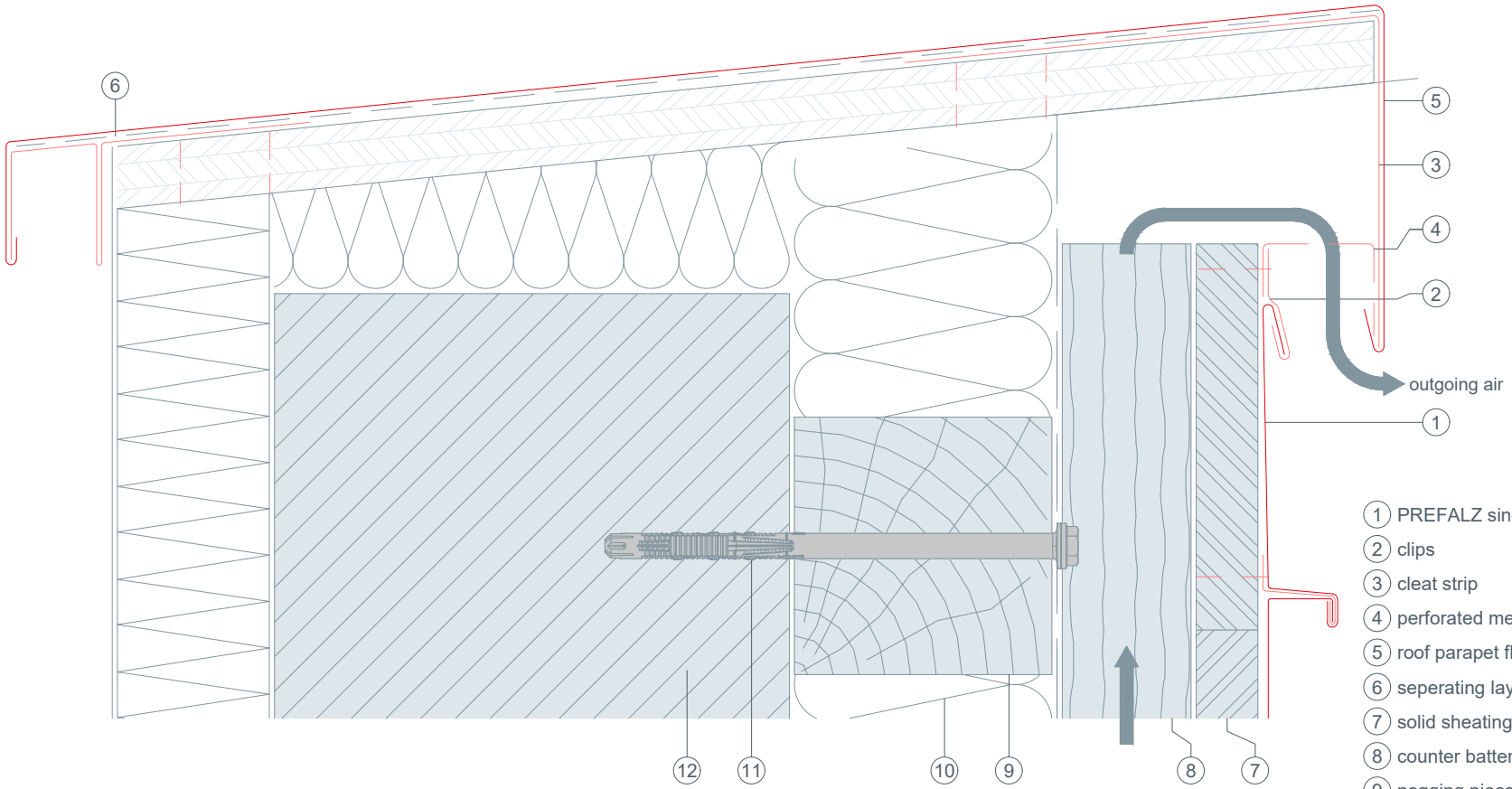

1. PREFALZ single-lock standing seam façade (horizontal)
2. clips
3. cleat strip
4. perforated metal plate (canted)
5. roof parapet flashing
6. seperating layer
7. solid sheating conforming to national guidelines
8. counter batten - ventilation gap
9. nogging piece
10. insulation
11. fastener driven into the supporting structure
12. structure substrate

bottom connection
vertical cross-section
PREFALZ FAÇADE (horizontal)
CAD DETAILS

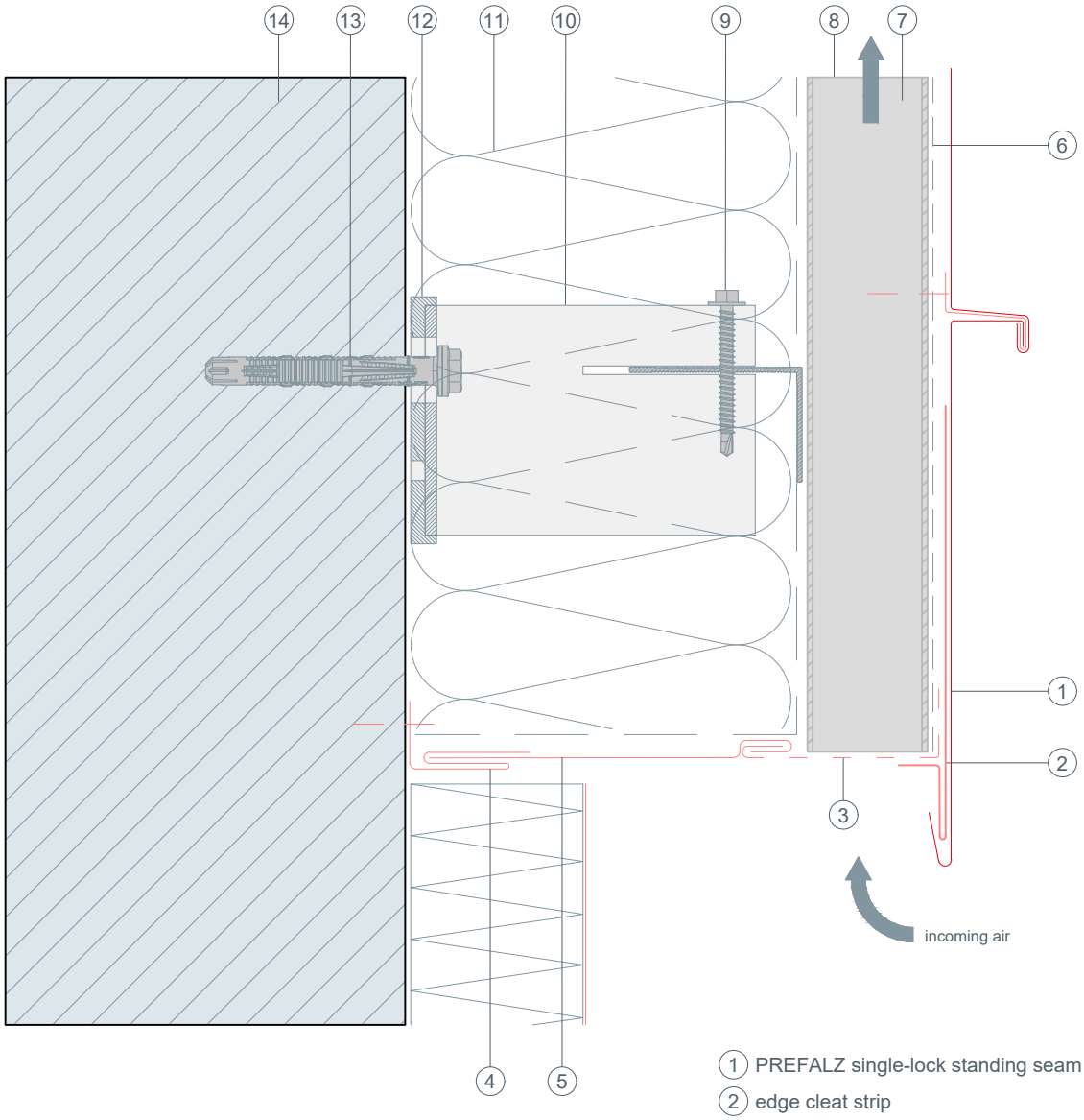

1. PREFALZ single-lock standing seam façade (horizontal)
2. edge cleat strip
3. perforated metal plate (canted)
4. insertion profile (PREFA)
5. cover flashing
6. seperating layer
7. trapezoidal sheet
8. ventilation gap
9. connection screw
10. spacer bracket
11. insulation
12. thermal break
13. fastener driven into the supporting structure
14. structure substrate

wall connection
horizontal cross-section
PREFALZ FAÇADE (horizontal)
CAD DETAILS

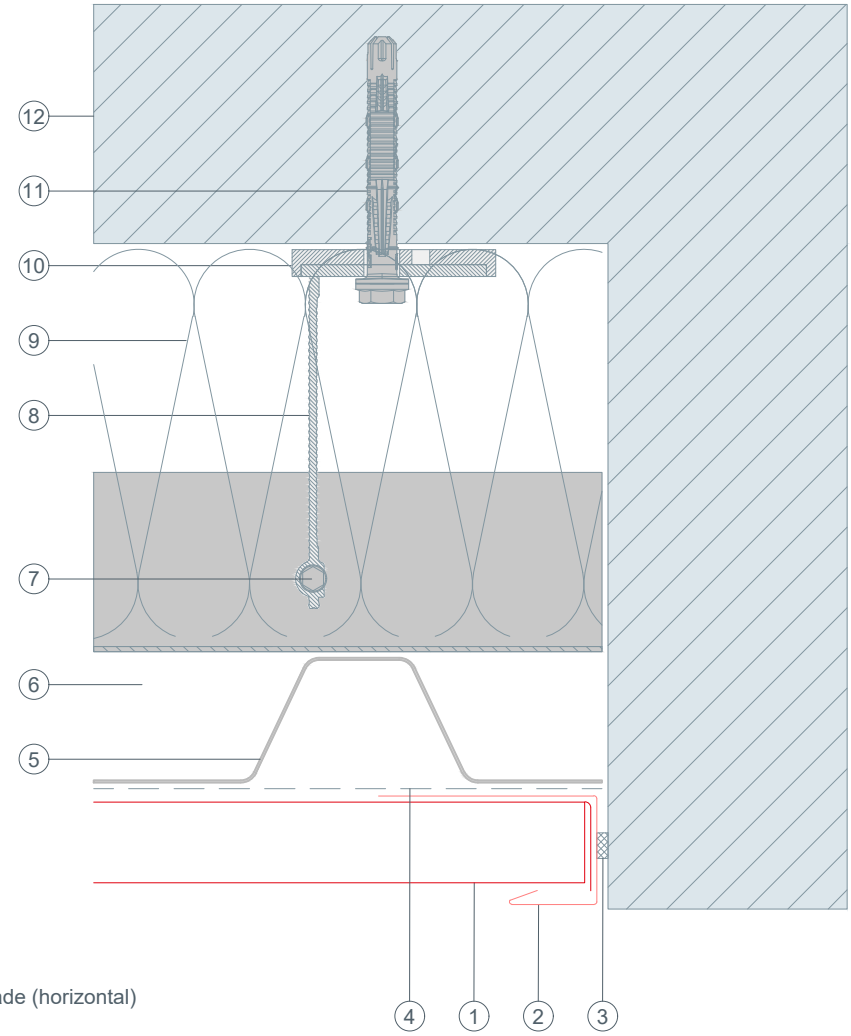

1. PREFALZ single-lock standing seam façade (horizontal)
2. channel profile (canted)
3. sealing tape
4. seperating layer
5. trapezoidal sheet
6. ventilation gap
7. connection screw
8. spacer bracket
9. insulation
10. thermal break
11. fastener driven into the supporting structure
12. structural substrate

external corner
horizontal cross-section
PREFALZ FAÇADE (horizontal)
CAD DETAILS

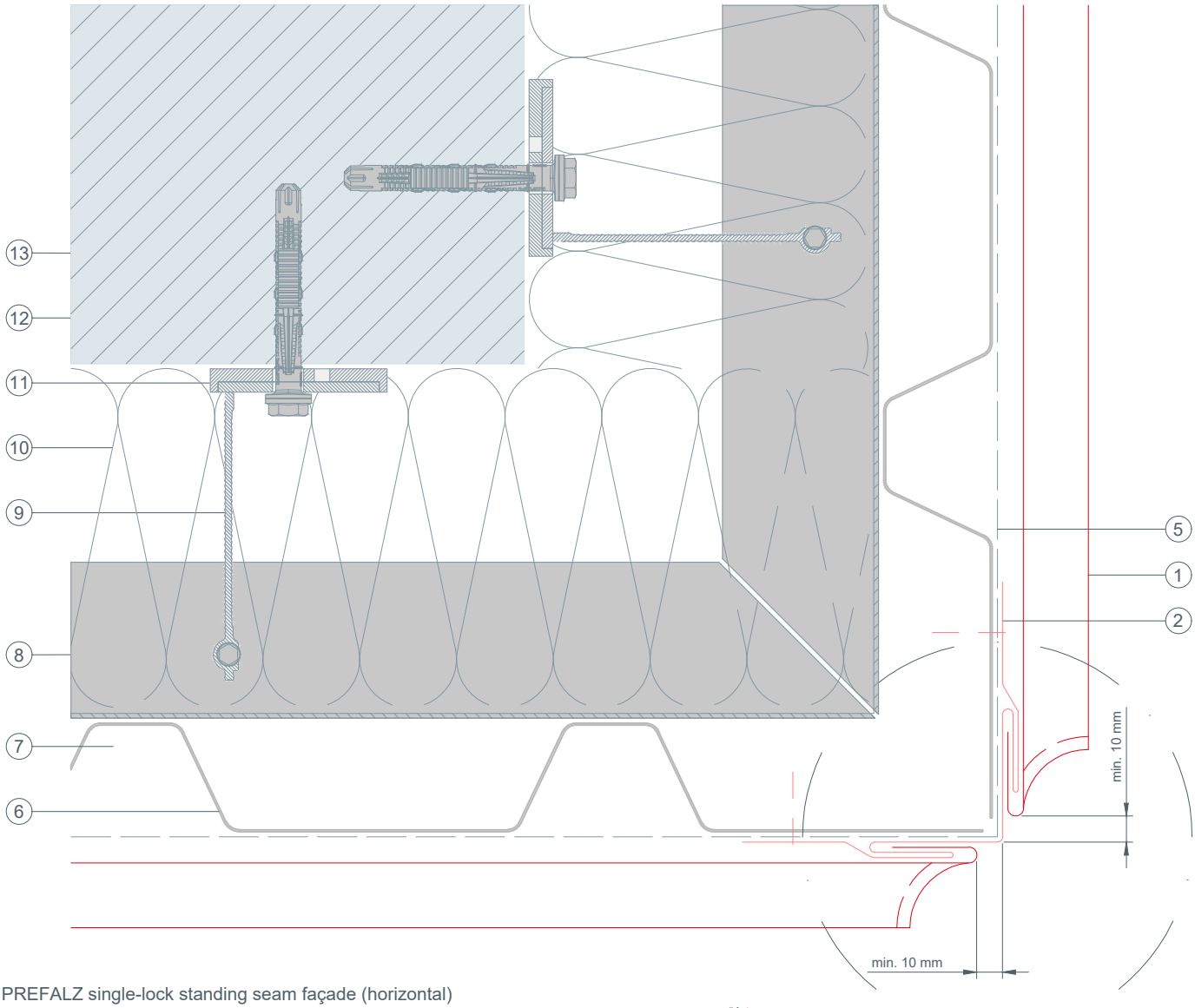

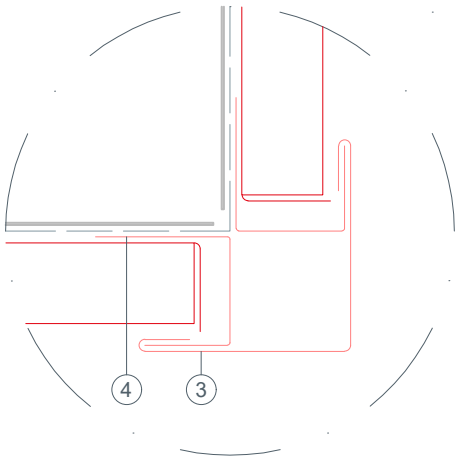

1. PREFALZ single-lock standing seam façade (horizontal)
2. external corner (canted)
3. external corner flashing
4. channel profile for external corner
5. seperating layer
6. trapezoidal sheet
7. ventilation gap
8. connection screw
9. spacer bracket
10. insulation
11. thermal break
12. fastener driven into the supporting structure
13. structural substrate

internal corner
horizontal cross-section
PREFALZ FAÇADE (horizontal)
CAD DETAILS

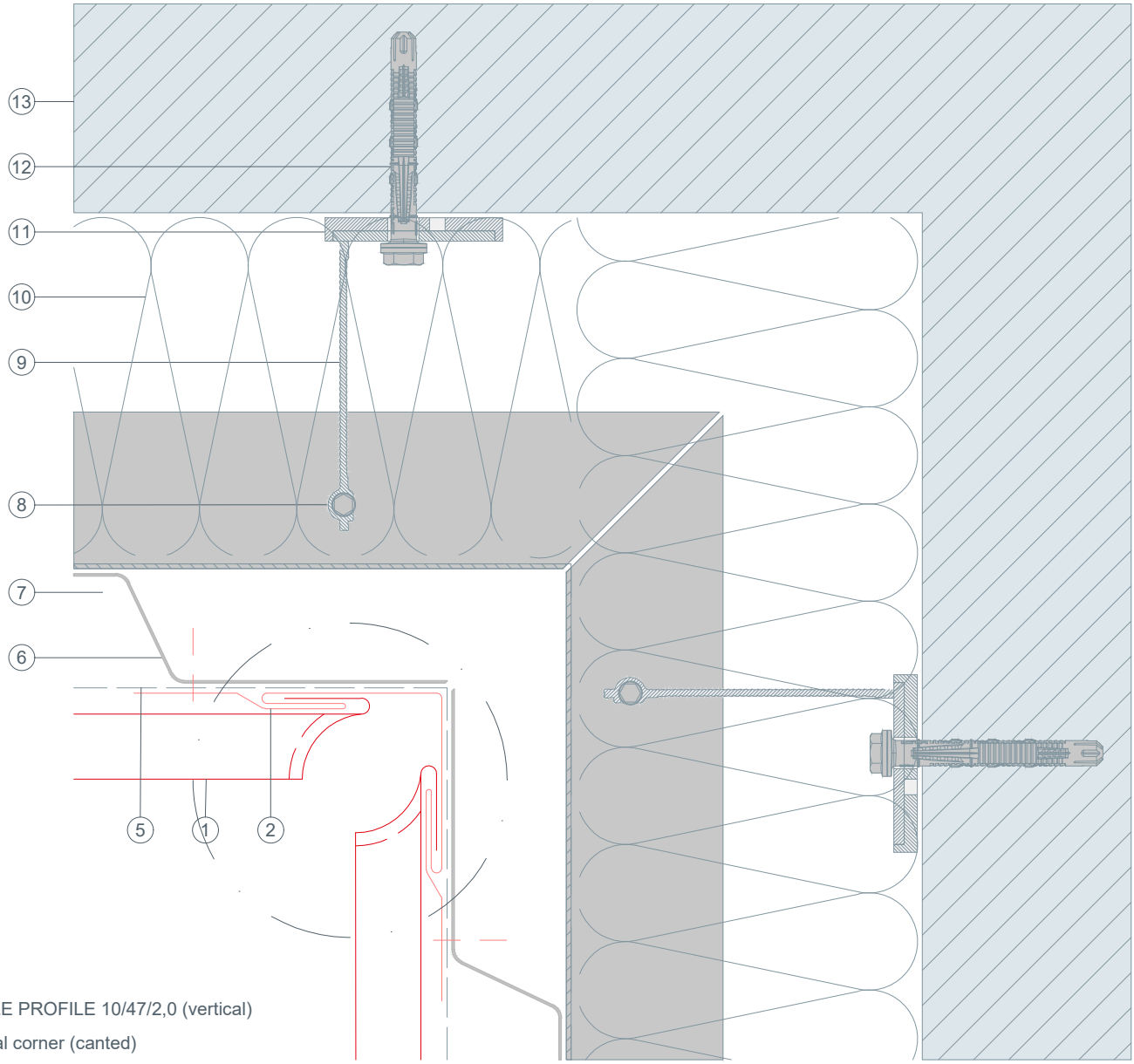

1 RIPPLE PROFILE 10/47/2,0 (vertical)
2 internal corner (canted)
3 internal corner flashing
4 channel profile for internal corner
5 seperating layer
6 trapezoidal sheet
7 ventilation gap
8 connection screw
9 spacer bracket
10 insulation
11 thermal break
12 fastener driven into the supporting structure
13 structural substrate

connection variant

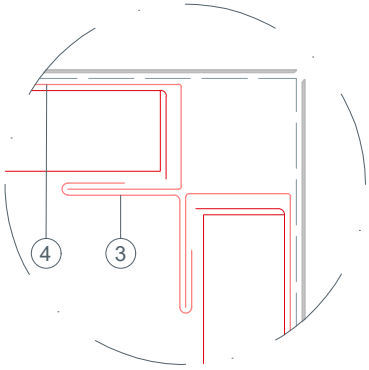

window ledge
vertical cross-section
PREFALZ FAÇADE (horizontal)
CAD DETAILS

1. RIPPLE PROFILE 10/47/2,0 (vertical)
2. clip
3. perforated metal plate (canted)
4. window ledge flashing strip
5. window ledge
6. seperating layer
7. trapezoidal sheet
8. ventilation gap
9. connection screw
10. spacer bracket
11. insulation
12. thermal break
13. fastener driven into the supporting structure
14. structural substrate

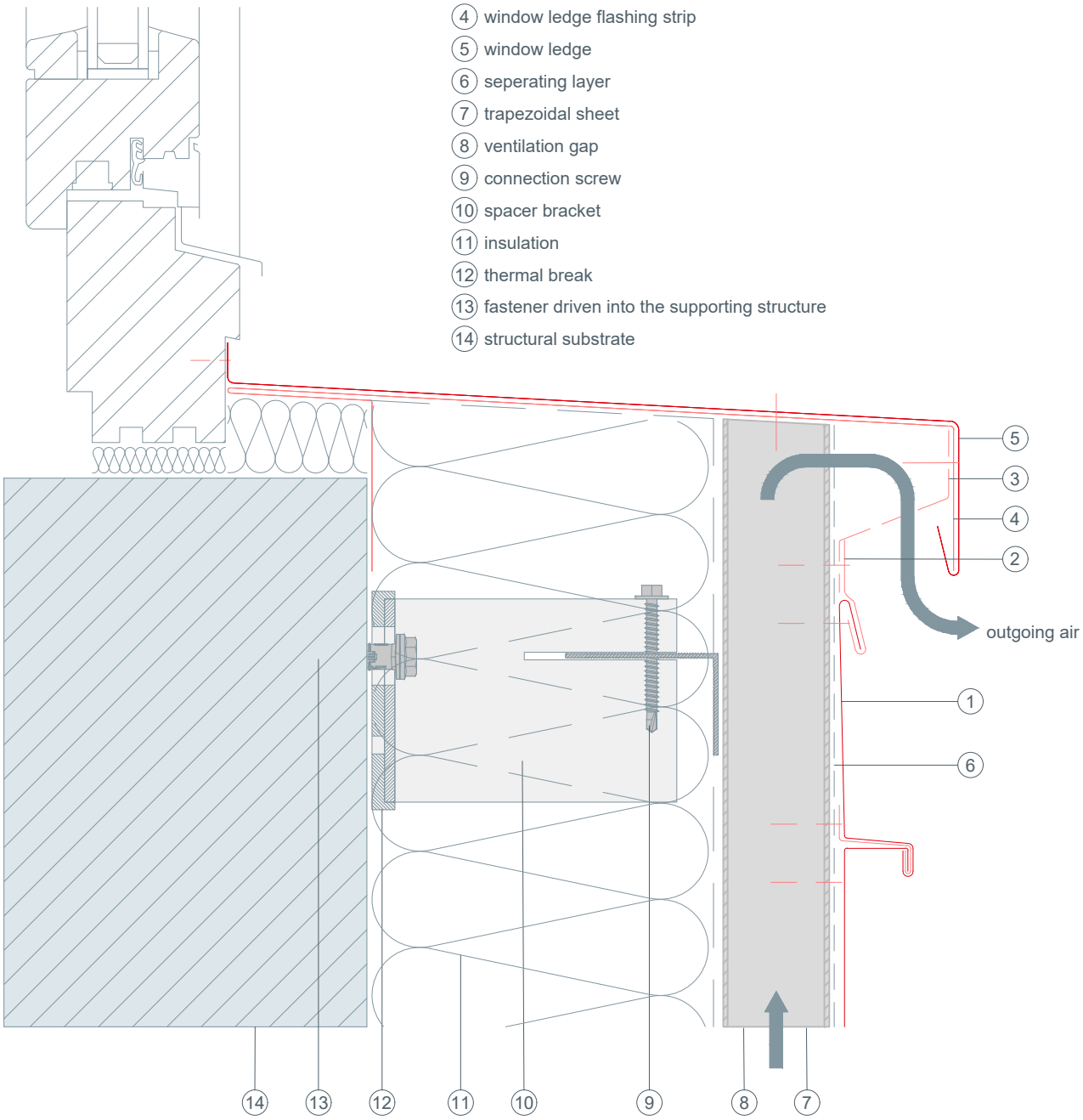

window reveals
horizontal cross-section
PREFALZ FAÇADE (horizontal)
CAD DETAILS

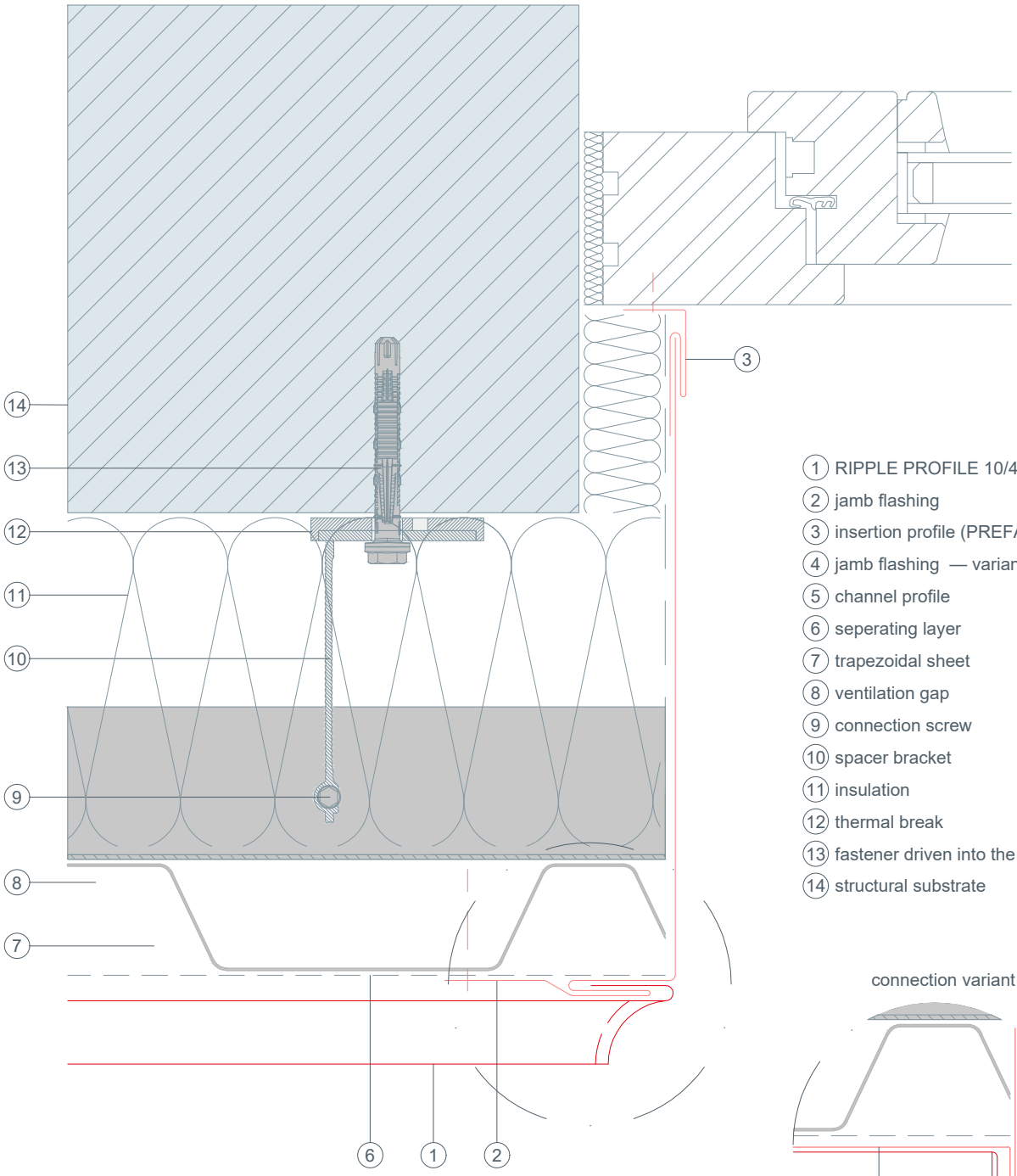

1. RIPPLE PROFILE 10/47/2,0 (vertical)
2. jamb flashing
3. insertion profile (PREFA)
4. jamb flashing — variant 1
5. channel profile
6. seperating layer
7. trapezoidal sheet
8. ventilation gap
9. connection screw
10. spacer bracket
11. insulation
12. thermal break
13. fastener driven into the supporting structure
14. structural substrate

connection variant

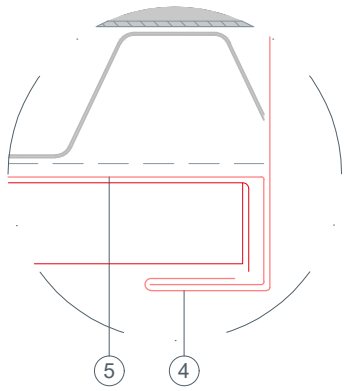

window lintel
vertical cross-section
PREFALZ FAÇADE (horizontal)
CAD DETAILS

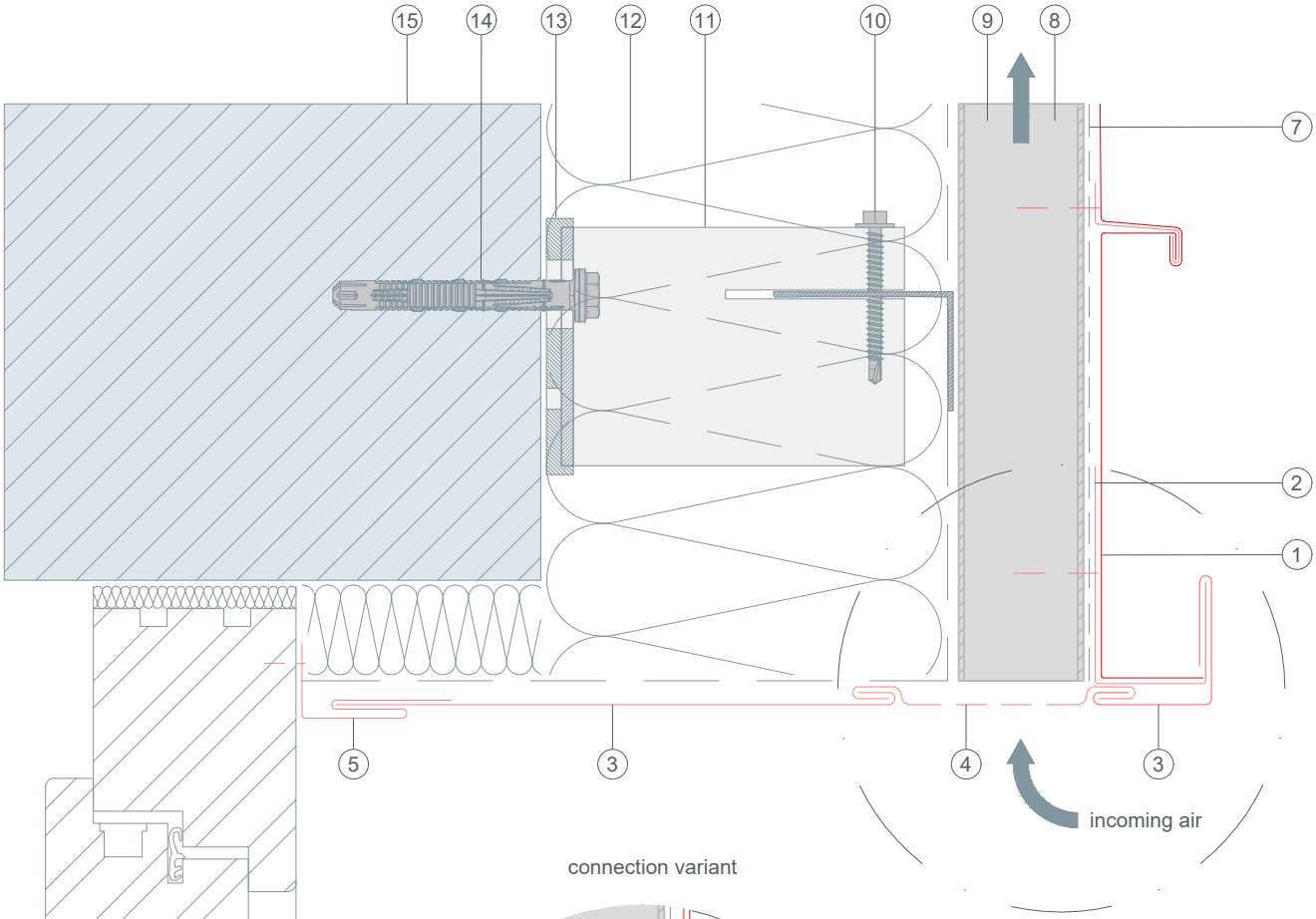

connection variant

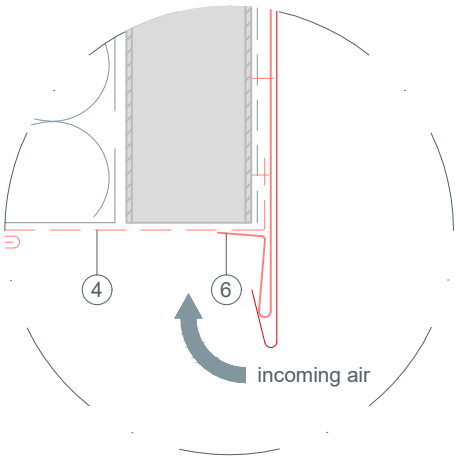

1. RIPPLE PROFILE 10/47/2,0 (vertical)
2. channel profile
3. cover flashing
4. perforated metal plate (canted)
5. insertion profile (PREFA)
6. edge cleat strip
7. seperating layer
8. trapezoidal sheet
9. ventilation gap
10. connection screw
11. spacer bracket
12. insulation
13. thermal break
14. fastener driven into the supporting structure
15. structural substrate

top connection
vertical cross-section
PREFALZ FAÇADE (horizontal)
CAD DETAILS

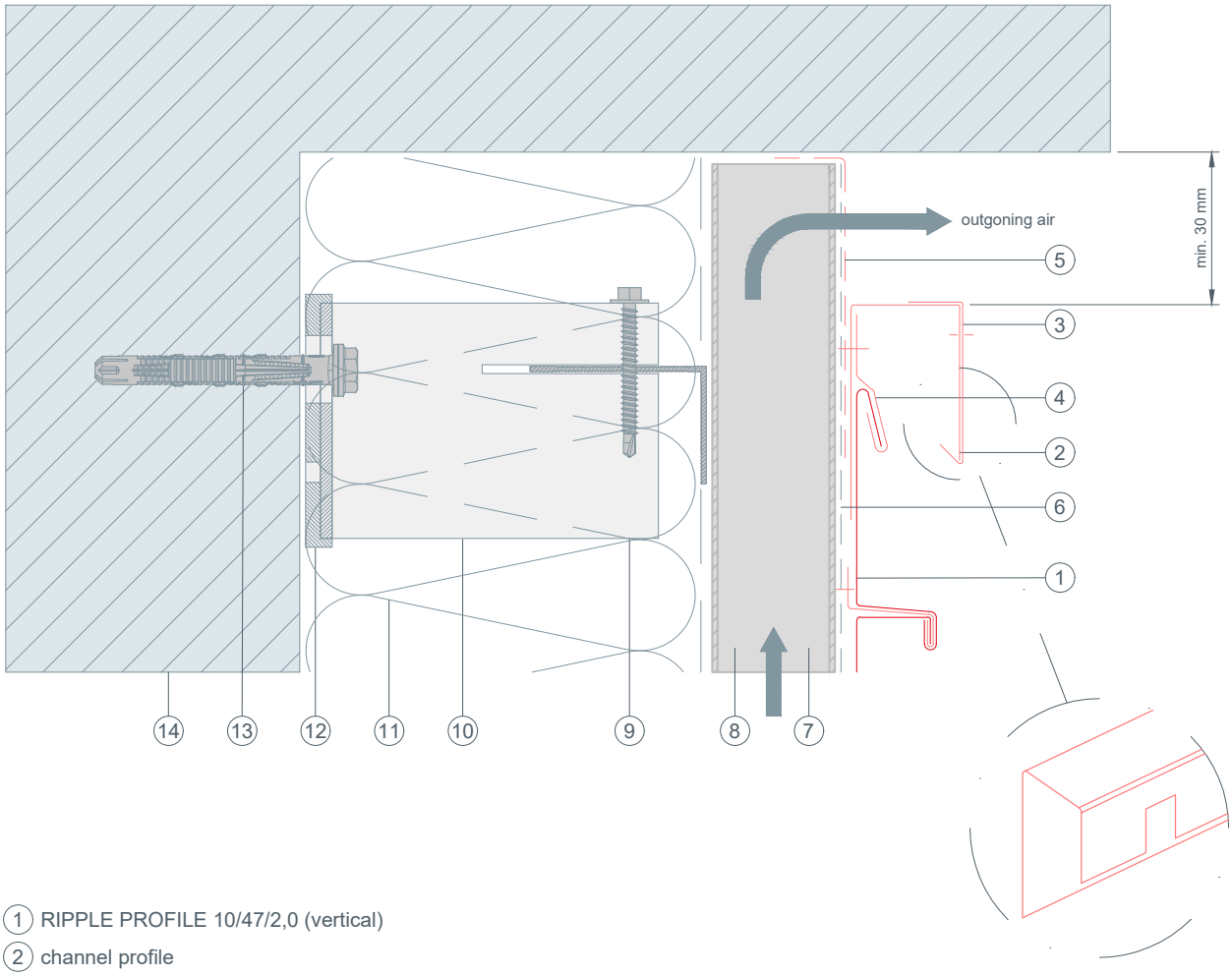

1. RIPPLE PROFILE 10/47/2,0 (vertical)
2. channel profile
3. closing profile
4. clip
5. perforated metal plate (canted)
6. seperating layer
7. trapezoidal sheet
8. ventilation gap
9. connection screw
10. spacer bracket
11. insulation
12. thermal break
13. fastener driven into the supporting structure
14. structural substrate

roof parapet
vertical cross-section
PREFALZ FAÇADE (horizontal)

CAD DETAILS

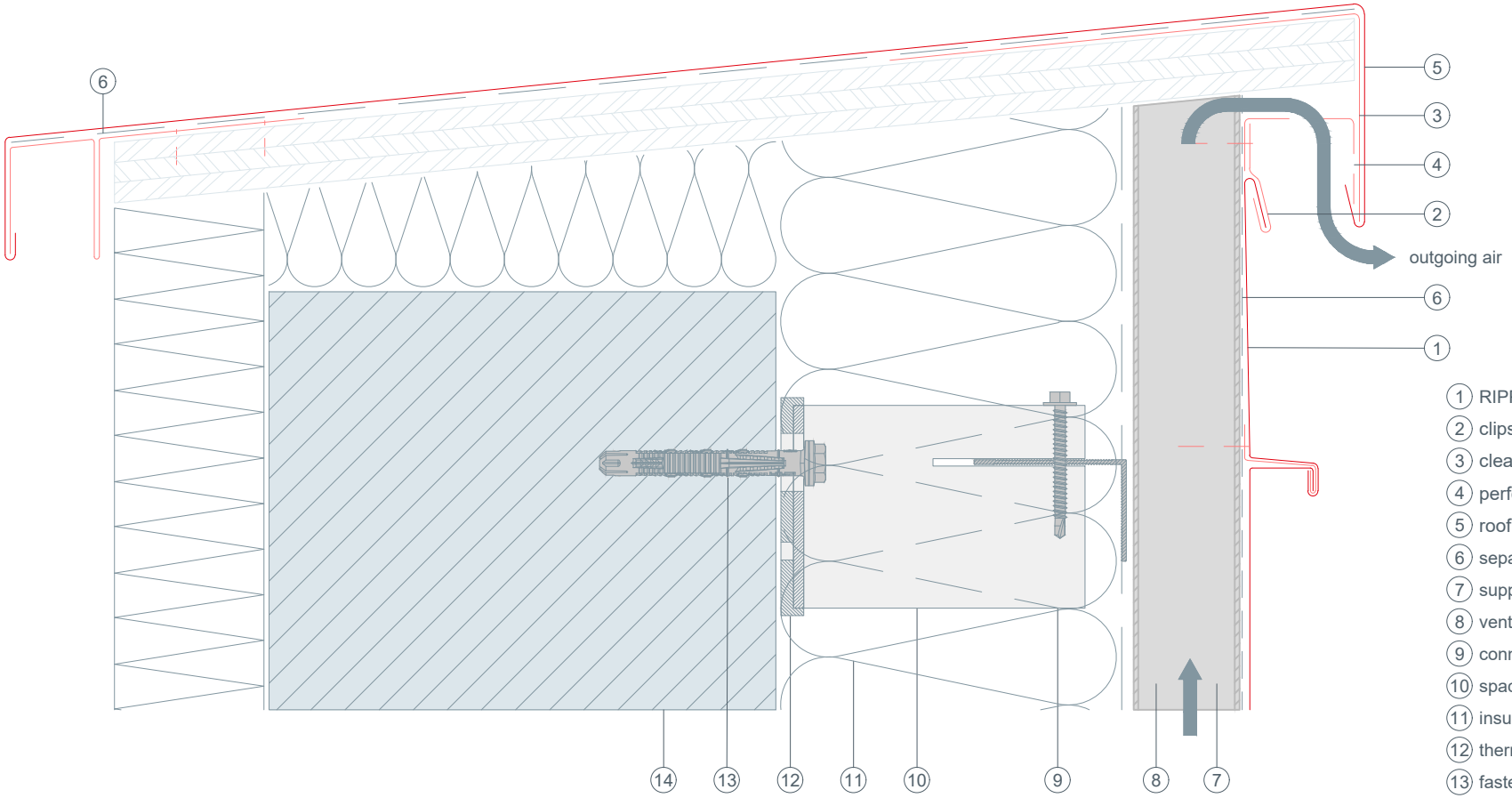

1. RIPPLE PROFILE 10/47/2,0 (vertical)
2. clips
3. cleat strip
4. perforated metal plate (canted)
5. roof parapet flashing
6. separating layer
7. support profile
8. ventilation gap
9. connection screw
10. spacer bracket
11. insulation
12. thermal break
13. fastener driven into the supporting structure
14. structural substrate